Micromotori Elettrici Svizzera

Motor Type AC CENTRIFUGAL FORWARD CURVED FAN 133 x 190

Code:	30.97331
Project code:	P5691

Supply			Poles	Speed	Stator	Impeller Type
230 V	50/60 Hz	~ 1	2	1	M35	Centrifugal Forward Curved Blade double inlet + scroll

Nominal Data

Nominal voltage	[V]	230
Frequency	[Hz]	50/60
Speed	[Rpm]	2420
Power input	[W]	170
Current draw	[A]	0,81
cos φ	[-]	0,91
Max Efficiency (stat A)	[%]	32,8
Efficiency Grade (N)	[-]	44,0
Capacitor	[uF]	8
	[V]	400

Technical Features

		50 Hz	60 Hz
Max. operating temperature	[°C]	70	50
	[°F]	158	122
Min. operating temperature	[°C]	-30	
	[°F]	-22	
Air flow @ 0 Pa	[m³/h]	980	
Thermal protector		Automatic reset	
Insulation class		F	
Motor bearing		Ball bearing	
Protection level		IP33	
Product compliant to		CE; EN 60335-1	
Approval		CSA on request	
		VDE on request	
Rotation (seen on rotor side)		Clockwise	
Impeller size (Ø x h)	[mm]	133 x 190	
Impeller material		Metal	
Weight	[kg]	4,22	
Cable lenght	[mm]	400	
Condensate discharge holes (on rotor side)		NO	
ERP compliant		ERP 2015	

Temperature Rise			
Test Setup @ 244 V		50 Hz	60 Hz
Scroll f.a.			
ΔT Main	[K]	53	82
ΔT Aux	[K]	63	86
Working Point			
ΔT Main	[K]	47	56
ΔT Aux	[K]	62	80

This document may be subject to change without prior notice. Pictures for information only. *Printed on 12/09/2014*

MES S.A.
VIA CANTONALE 5, CH-6855 STABIO, SWITZERLAND
TEL. +41 (0)91 641 5111 FAX +41 (0)91 641 5298 EMAIL: mes@mes.ch WEBSITE: www.cebi.com

☐Copying of this document and giving it to others and the use or communication of the contents thereof are forbidden without express ☐authority. Offenders are liable to the payment of damages.
☐All rights reserved in the event of grant of a patent or the registration of utility model or design.

Air flow performance at 230V 50Hz — P5691

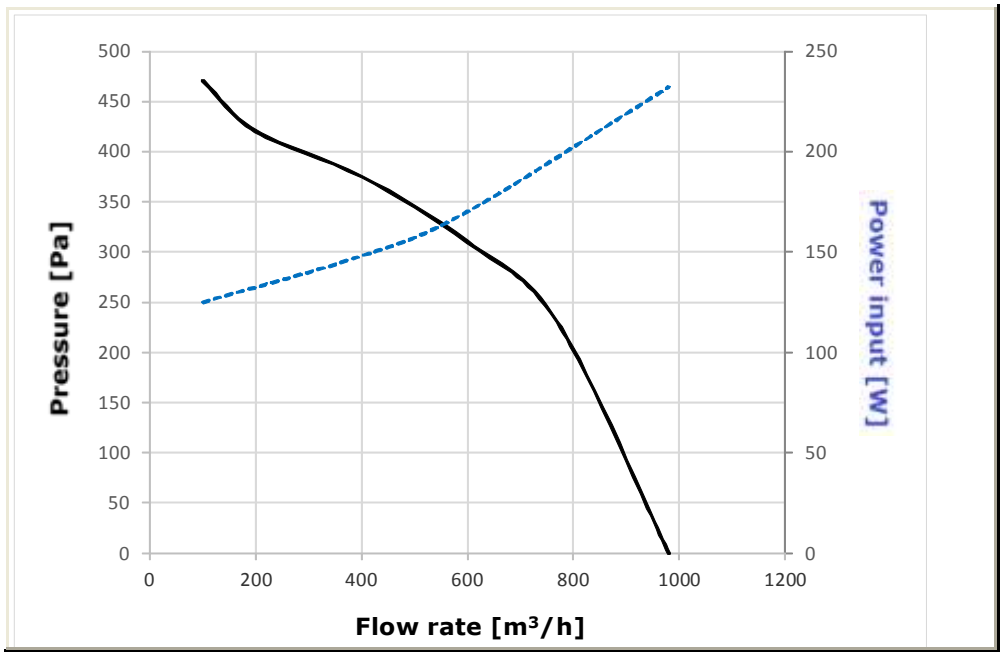

TEST SETUP:

Scroll MES 133x190

Supply [V]	Supply [Hz]	Speed [rpm]	Power [W]	Current [A]	Efficiency [%]	Flow rate [m³/h]	Pressure [Pa]	Flow rate [cfm]	Pressure [in_H_2O]
230	50	2740	125	0,65	10,4	100	470	59	1,887
230	50	2600	148	0,73	28,2	400	375	235	1,506
230	50	2420	170	0,81	30,4	600	310	353	1,245
230	50	1450	232	1,00	0,0	980	0	577	0,000
230	50	0	251	1,09	Locked rotor test				

MES S.A.
VIA CANTONALE 5, CH-6855 STABIO, SWITZERLAND
TEL. +41 (0)91 641 5111 FAX +41 (0)91 641 5298 EMAIL: mes@mes.ch WEBSITE: www.cebi.com

☐Copying of this document and giving it to others and the use or communication of the contents thereof are forbidden without express ☐authority. Offenders are liable to the payment of damages.
☐All rights reserved in the event of grant of a patent or the registration of utility model or design.

Air flow performance at 230V 60Hz — P5691

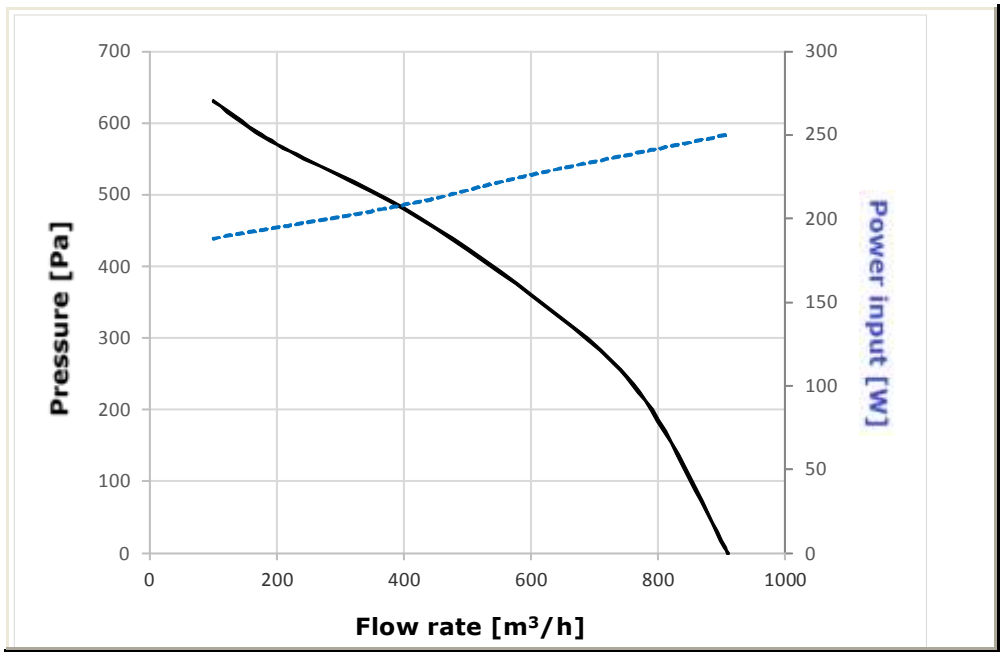

TEST SETUP:

Scroll MES 133x190

Supply [V]	Supply [Hz]	Speed [rpm]	Power [W]	Current [A]	Efficiency [%]	Flow rate [m³/h]	Pressure [Pa]	Flow rate [cfm]	Pressure [in_H_2O]
230	60	3135	188	1,00	9,3	100	630	59	2,529
230	60	2940	208	1,04	25,6	400	480	235	1,927
230	60	2615	226	1,06	26,5	600	360	353	1,445
230	60	1350	250	1,10	0,0	910	0	536	0,000
230	60	0	257	1,13	Locked rotor test				

MES S.A.
VIA CANTONALE 5, CH-6855 STABIO, SWITZERLAND
TEL. +41 (0)91 641 5111 FAX +41 (0)91 641 5298 EMAIL: mes@mes.ch WEBSITE: www.cebi.com

☐Copying of this document and giving it to others and the use or communication of the contents thereof are forbidden without express ☐authority. Offenders are liable to the payment of damages.
☐All rights reserved in the event of grant of a patent or the registration of utility model or design.

Overall Dimensions P5691

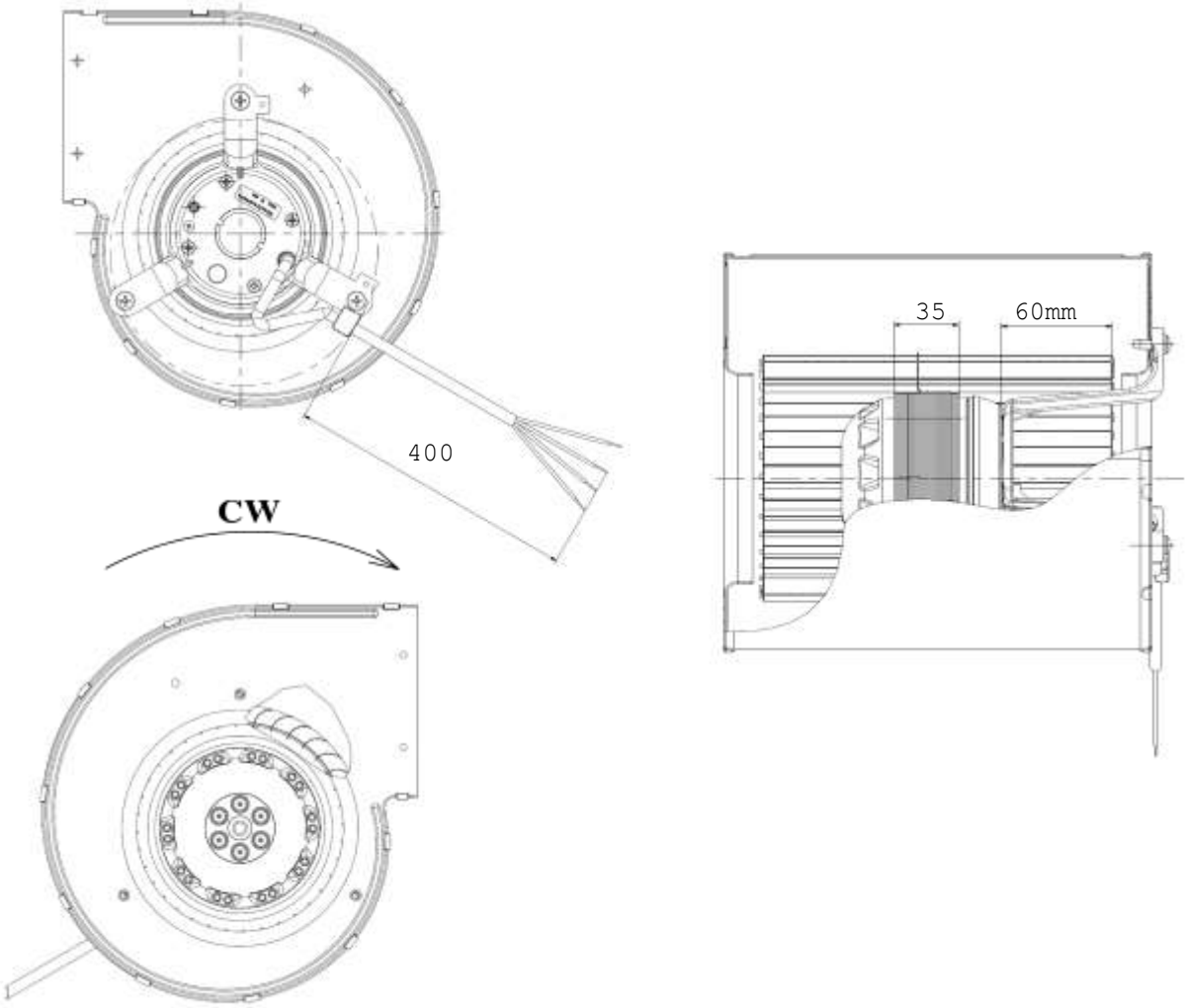

Wiring Diagram

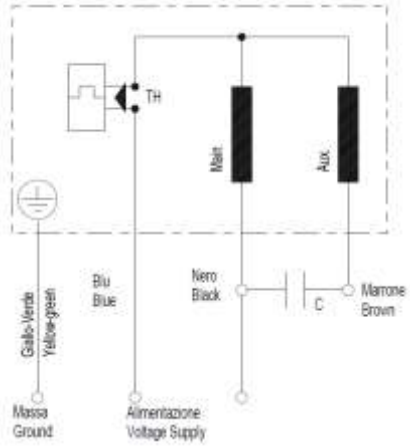

MES S.A.
VIA CANTONALE 5, CH-6855 STABIO, SWITZERLAND
TEL. +41 (0)91 641 5111 FAX +41 (0)91 641 5298 EMAIL: mes@mes.ch WEBSITE: www.cebi.com

☐Copying of this document and giving it to others and the use or communication of the contents thereof are forbidden without express ☐authority. Offenders are liable to the payment of damages.
☐All rights reserved in the event of grant of a patent or the registration of utility model or design.