ø 225 x 99 mm

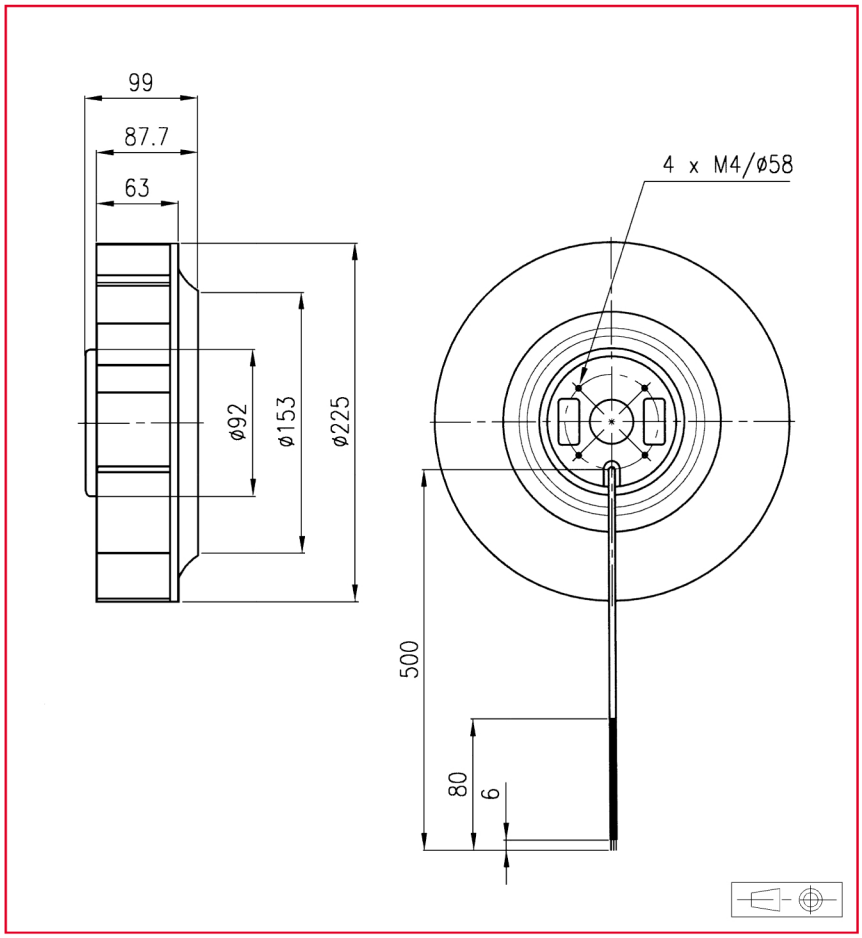

Approvals
See selection guide pages 15 to 26

Life expectancy
L-10 LIFE AT 40°C:
80 000 hours
For more details, see page 14

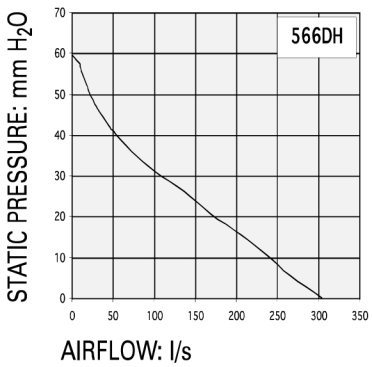

Brushless DC Motor

Wheel material: plastic UL 94 VO or steel
Bearing system: ball bearings
Connection: flying leads
Electrical protection: thermally protected

Design code: C13 - Tropicalized
IP 44
Speed sensor (TTL or open collector)
Variable speed (0 - 10 V input / PWM)

Part number	Nominal voltage	Airflow	Noise level	Nominal speed	Input power	Voltage range	Bearing system		Connection type		Opearting temperature	
	V	l/s	dB(A)	RPM	W	V	Ball	Sleeve	Leads	Terminals	Min. °C	Max. °C
566DH4LM19000	48	304,0	69	2170	110	(36-60)	x		x		- 20	70

Additional versions:
Salt spray protection - IP 54 - alarm as options
Other voltages: consult factory

Backward Curved Fans

Non contractual document. Specifications are subject to change without notice. Pictures for information only. Edition N°1.