ø 250 x 70 mm

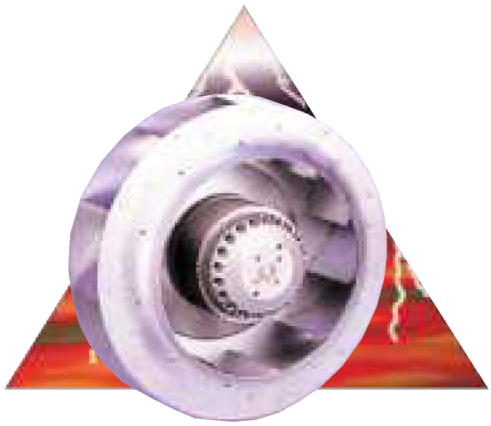

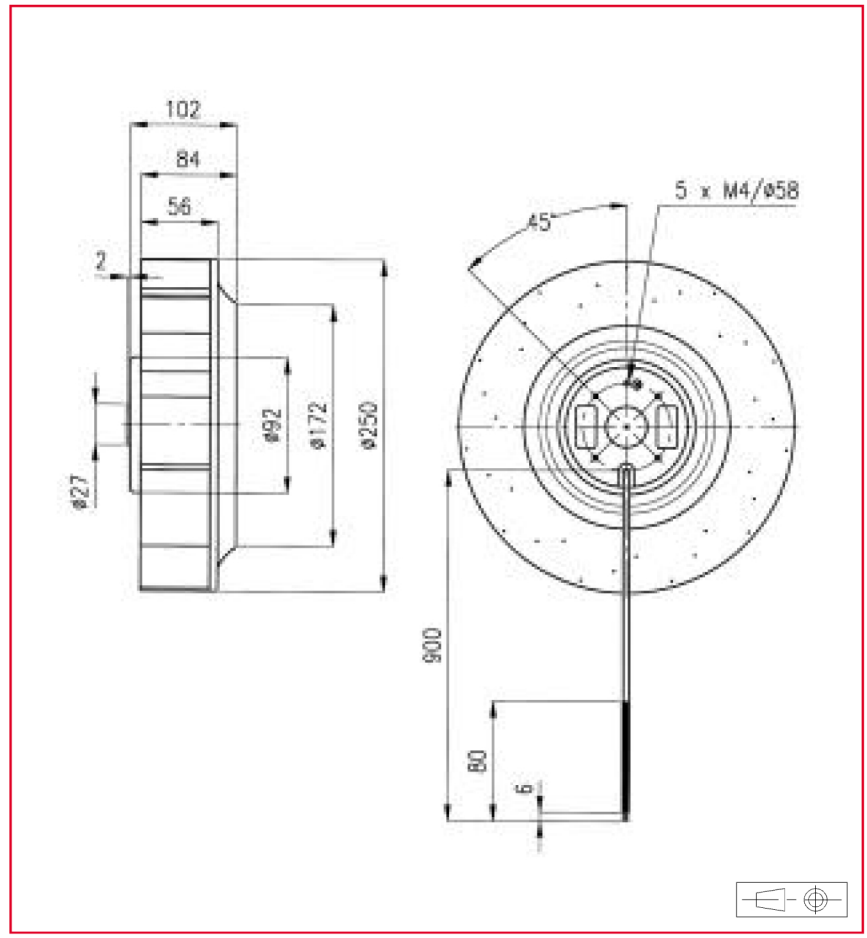

Approvals
See selection guide pages 15 to 26

Life expectancy
L-10 LIFE AT 40°C:
25 000 hours
For more details, see page 14

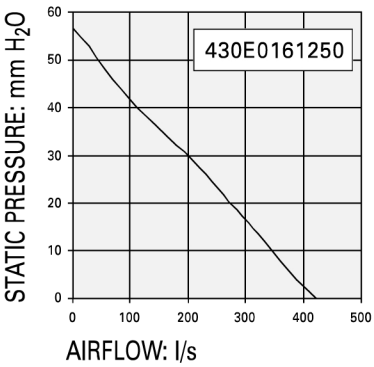

AC Motor
Wheel material: Steel plate
Weight: 3 kg
Bearing system: ball bearings
Connection: flying leads
Electrical protection: thermally protected

Part number	Nominal voltage	Airflow	Noise level	Nominal speed	Frequency	Phases	Capacitor	Input power	Nominal current	Starting current	Opearting temperature	
	V	l/s	dB(A)	rpm	Hz		µF	W	mA	mA	°C	°C
430E0161250	230	422,2	76	2415	50	1	6	195	870	1400	- 20	60

Additional versions:
115 V 60 Hz

Non contractual document. Specifications are subject to change without notice. Pictures for information only. Edition N°1.