KFB Ø 225 x 99 MM SERIES

New

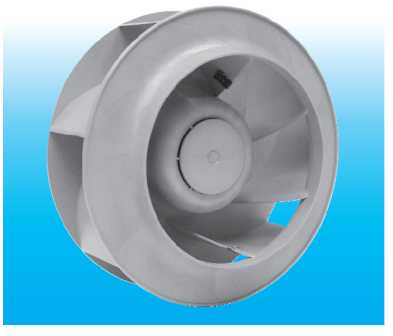

* Bearing Type
  Ball Bearings
* Material
  Impeller : Plastic (UL 94V-0)
  Pillow : Die-Cast Aluminum
* Lead Wires :
  UL 1430 AWG #22 OR Equivalent
  Red Wire Positive (+)
  Black Wire Negative (-)
* Weight : 1120g (39.50 oz)

DIMENSIONS DRAWING

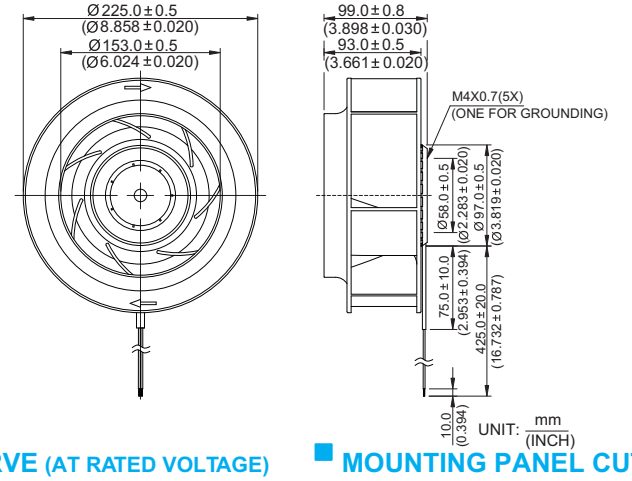

P & Q CURVE (AT RATED VOLTAGE)

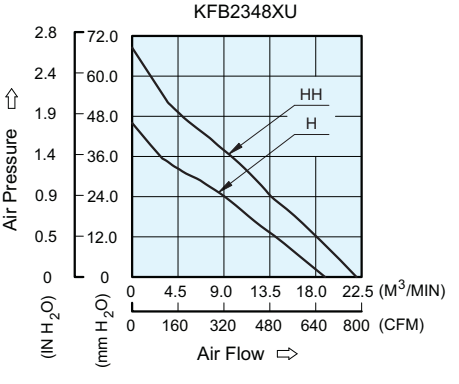

MOUNTING PANEL CUTOUT

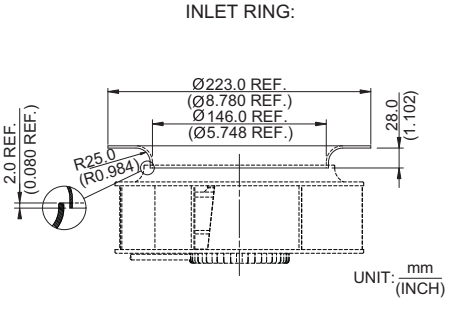

MODEL		Rated Voltage	Operating Voltage Range	Input Current	Input Power	Speed	Maximum Air Flow		Maximum Air Pressure		Noise
PART NO.	FUNCTION	VDC	VDC	Amp	Watt	R.P.M.	m^3 /min	CFM	mmH_2O	IN H_2O	dB-A
KFB2348HU	-R00 / -F00	48	28.0 to 60.0	1.45	69.60	2300	18.720	661.00	46.00	1.810	69.0
KFB2348HHU	-R00 / -F00	48	28.0 to 60.0	2.30	110.40	2700	21.850	771.50	68.50	2.700	73.5

* Function type is optional.
* The max. air flow and the speed are measured in free air ; max. air pressure is measured at zero air flow.
* Noise is measured in anechoic chamber in free air, one meter from intake side.
* All readings are typical values at rated voltage.
* Specifications are subject to change without notice.

Homepage : www.nuritech21.com
Office : (031) 479 - 6222