KFB Ø 175 x 69 MM SERIES

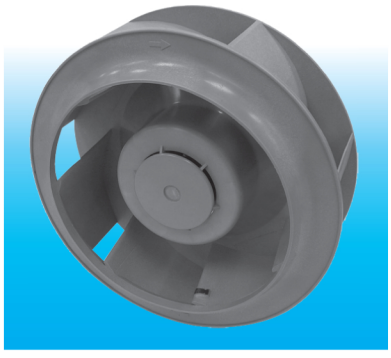

* Bearing Type
  Ball Bearings
* Material
* Impeller : Plastic (UL 94V-0)
  Pillow : Die-Cast Aluminum
* Lead Wires :
  UL 1430 AWG #22 OR Equivalent
  Red Wire Positive (+)
  Black Wire Negative (-)
* Weight : 670g (23.63 oz)

■ DIMENSIONS DRAWING

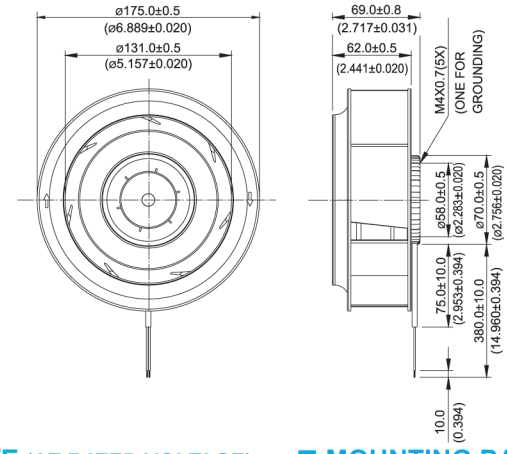

UNIT: mm (INCH)

■ P & Q CURVE (AT RATED VOLTAGE)

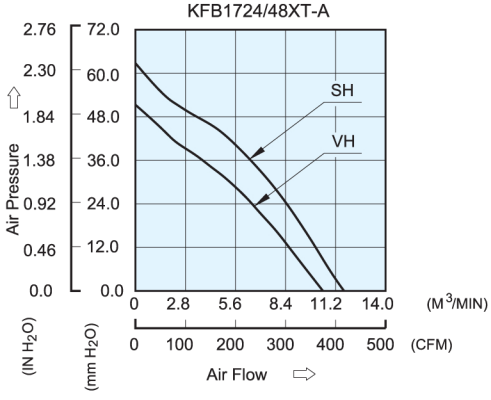

■ MOUNTING PANEL CUTOUT

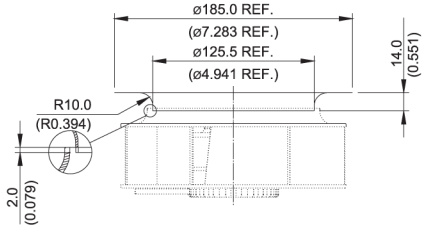

UNIT: mm (INCH)

MODEL			Rated Voltage	Operating Voltage Range	Input Current	Input Power	Speed	Maximum Air Flow		Maximum Air Pressure		Noise
PART NO.	REV.	FUNCTION	VDC	VDC	Amp	Watt	R.P.M.	m^3 /min	CFM	mmH_2O	IN H_2O	dB-A
KFB1724VHT	-A	-R00 / -F00	24	14.0 to 27.6	2.27	54.48	3600	10.609	374.67	49.88	1.964	70.0
KFB1748VHT	-A	-R00 / -F00	48	28.0 to 60.0	1.13	54.24						
KFB1724SHT	-A	-R00 / -F00	24	14.0 to 27.6	3.14	75.36	4000	11.688	412.78	61.03	2.403	73.0
KFB1748SHT	-A	-R00 / -F00	48	28.0 to 53.0	1.45	69.60						

* Function type is optional.
* The max. air flow and the speed are measured in free air ; max. air pressure is measured at zero air flow.
* Noise is measured in anechoic chamber in free air, one meter from intake side.
* All readings are typical values at rated voltage.
* Specifications are subject to change without notice.

Homepage : www.nuritech21.com
Office : (031) 479 - 6222